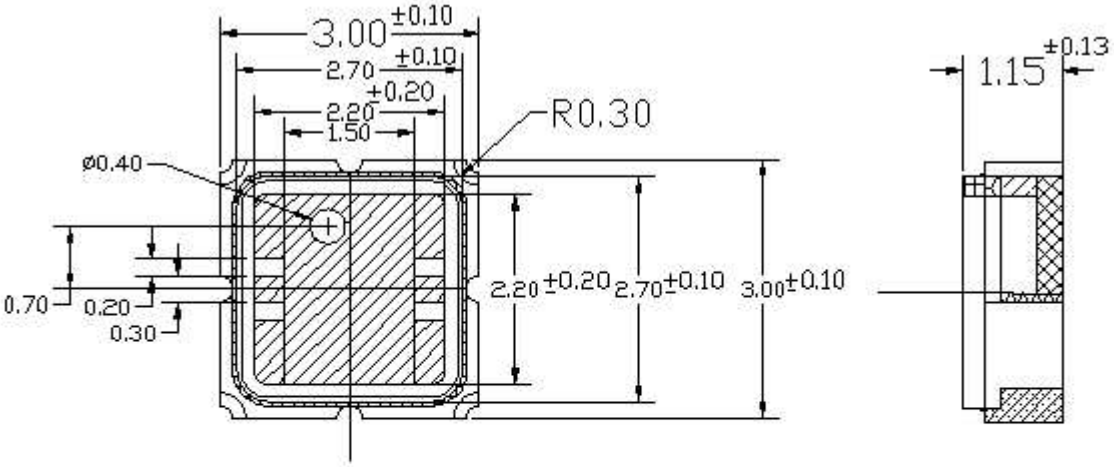
3.00 ±0.10
2.70 ±0.10
2.20 ±0.20
1.50
R0.30
ø0.40
0.70
0.20
0.30
2.20 ±0.20
2.70 ±0.10
3.00 ±0.10
1.15 ±0.13

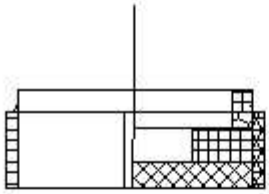

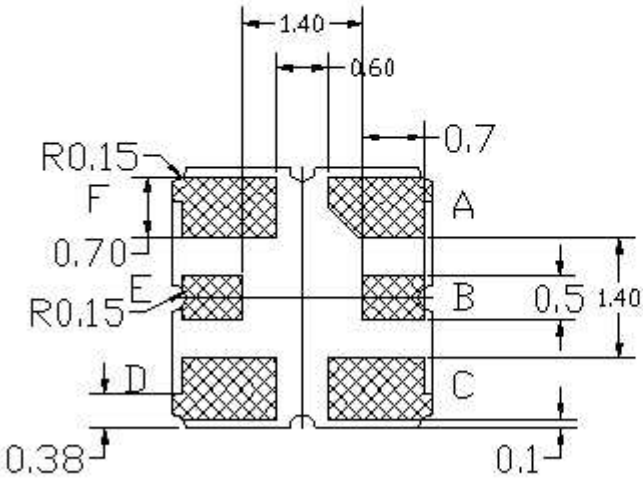
1.40
0.60
0.7
R0.15
F
A
0.70
E
R0.15
B
0.5
1.40
D
C
0.38
0.1