Low Loss SAW 1008 MHz Filter

Bandwidth 15.7 MHz

AEC Part Number AE45141H-1008

PRELIMINARY DATA

Typical performance

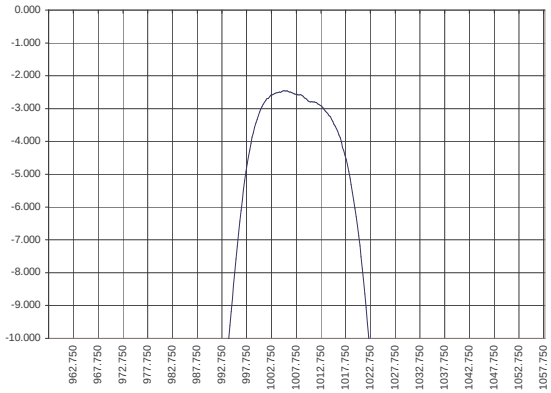

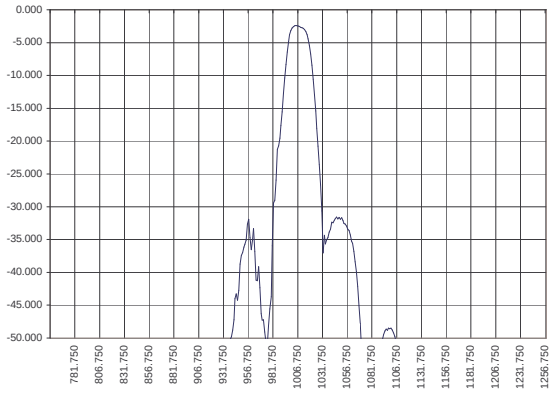

Specifications

Parameter	Unit	Min	Typ	Max
Central frequency	MHz	1007	1008	1009
Inserted loss (unmatched)	dB	-	-2.6	-
Bandwidth @-1dB	MHz	-	15.75	-
Bandwidth @-25dB	MHz	-	46.5	-
Bandwidth @-30dB	MHz	-	50.25	-
Amplitude ripple	dB	-	-	1.0
Ultimate rejection	dB	50.0	-	-
Substrate			36LTO	
Temperature range	^{0}C	-40		85

Notes:

1. The design, manufacturing process, and specifications of this filter are subject to change.
2. Specification valid for measurements in AEC test fixture

Case

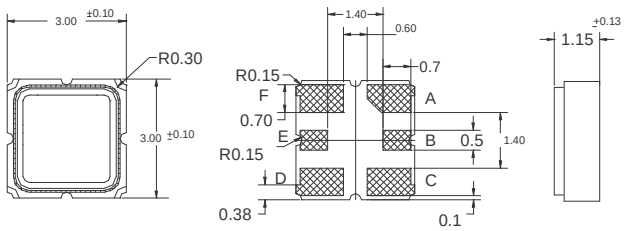
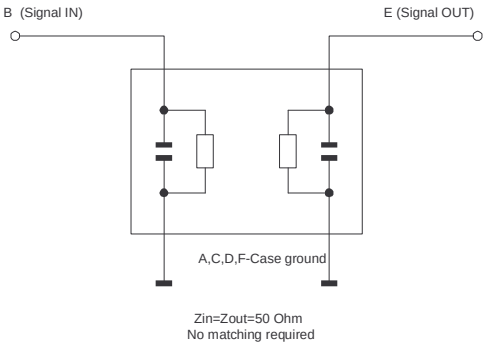
Matching