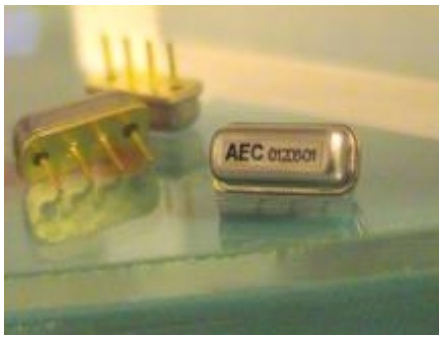

Low Loss SAW 152 MHz Filter

Bandwidth 7.6 MHz

AEC Part Number AE5572M-152

PRELIMINARY DATA

Typical performance

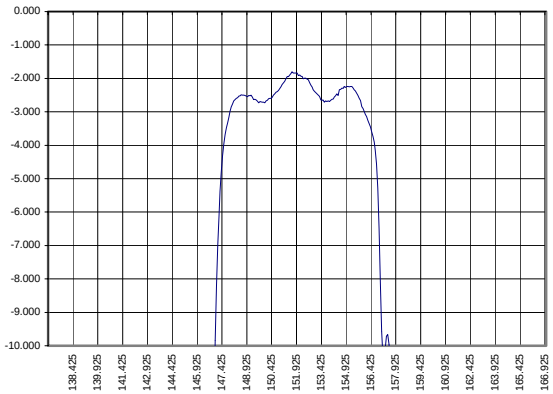

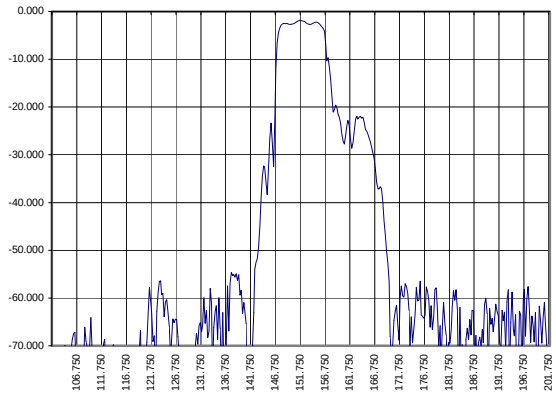

Specifications

Parameter	Unit	Min	Typ	Max
Central frequency	MHz	151.53	152.0	152.47
Inserted loss	dB	-	-1.8	-2.0
Bandwidth @-1.1dB	MHz	7.6	8.0	-
Bandwidth @-20dB	MHz	-	18.5	-
Bandwidth @-40dB	MHz	-	24.75	-
Amplitude ripple	dB	-	0.9	1.1
Ultimate rejection	dB	50.0	-	-
Substrate			49 YX LiNbO3	
Temperature range	^{0}C	-55		85

Notes:

1. The design, manufacturing process, and specifications of this filter are subject to change.
2. Specification valid for measurements in AEC test fixture

Case

SIP4M

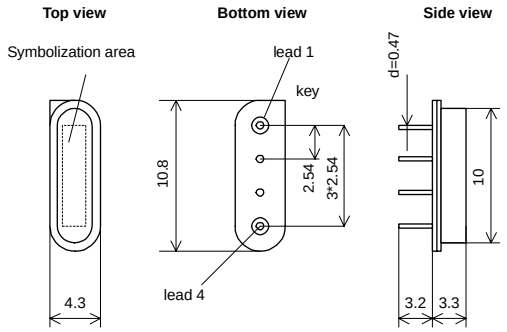

Dimensions in mm
Mass 0.8 g

Matching

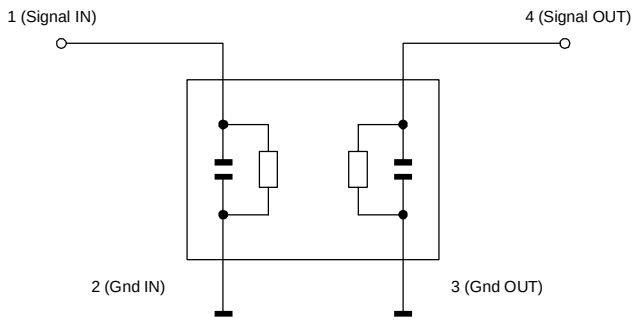

Zin=Zout=50 Ohm
No matching required